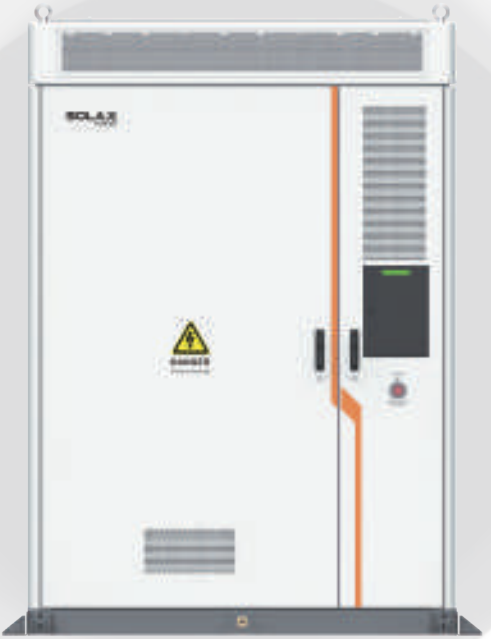

Air Cooling Energy Storage System

TRENE-P100B215

Installation Manual

Version 4.0

www.solaxpower.com

eManual in the QR code or at http://kb.solaxpower.com/

Table of Contents

Safety 1
Installation 8

Safety

General Notice

1. Contents may be periodically updated or revised. SolaX reserves the right to make improvements or changes in the product(s) and the program(s) described in this manual without the prior notice.
2. The installation, maintenance and grid-related setting can only be performed by qualified personnel who:
   - Are licensed and/or satisfy state and local jurisdiction regulations;
   - Have good knowledge of this manual and other related documents.
3. Before installing the device, carefully read, fully understand and strictly follow the detailed instruction of the user manual and other related regulations. SolaX shall not be liable for any consequences caused by the violation of the storage, transportation, installation, and operation regulations specified in this document and the user manual.
4. Use insulated tools when installing the device. Individual protective tools must be worn during installation, electrical connection and maintenance.
5. Please visit the website www.solaxpower.com of SolaX for more information.

Safety Instruction

For safety reasons, installers are responsible for familiarizing themselves with the contents of the Manual and all warnings before performing installation.

Descriptions of Labels

	CE mark of conformity		TUV certification
	RCM mark of conformity		Grounding point
	Additional grounding point		Caution, risk of danger
	The battery module may explode.		Caution, risk of electric shock
	Caution, hot surface		Do not operate this system until it is isolated from mains and battery.
	Read the enclosed documentations.		Keep the system away from children.
	Keep the system away from open flames or ignition systems.		Do not dispose of the device together with household waste.
	Danger of high voltage. Do not touch live parts for 15 minutes after disconnection from the power sources.		The system must be disposed of at a proper facility for environmentally-safe recycling.

DANGER!

- According to the local laws and regulations related to high-altitude work, operators must wear PPE, e.g., a helmet, safety belt, or waist harness, when they work at heights, while the other end of the harness must connect to a secure structure to prevent fall incidents.

DANGER!

- Do not connect the positive and negative poles of a battery together. Otherwise, it may be short-circuited. This will result in an excessive flow of current and large quantities of energy for a short time, and then will cause battery leakage, smoke, the emission of flammable gases, thermal runaway, fire, or even an explosion. Therefore, the battery must be powered off before maintenance.
- If a battery is overheated, it will cause leakage, smoke, release of flammable gases, thermal runaway, fire, or even an explosion. Therefore, please ensure that the installation site shall be well ventilated and kept away from high temperatures.
- Do not dismantle, change, shake, drop, crush, impact, cut, penetrate with a sharp object, or any other ways to damage the battery. Otherwise, it may cause leakage, smoke, emission of flammable gases, thermal runaway, fire, or even an explosion.
- Do not mix different types or makes of the battery. Otherwise, it may cause leakage or rupture, resulting in personal injury or property damage.
- The battery electrolyte is toxic and volatile. Never get in contact with the leaked liquids or inhale gases in the case of the battery leakage or odor, and contact professionals immediately. The professional must wear PPE (including but not limited to safety glasses, safety gloves, gas masks, and protective clothing) before powering off the device, and then contact our company at once after removing the damaged battery.
- Normally, the battery will not release any gases. However, in the following situations: burnt, needle-pricked, squeezed, struck by lightning, overcharged, or subject to other adverse conditions that may cause battery thermal runaway, the battery may be damaged or an abnormal chemical reaction may occur inside the battery, resulting in electrolyte leakage or production of gases. If the battery needs to exhaust flammable gas, safe emission measures must be taken to prevent fire and device corrosion.
- Do not use damaged batteries, and ensure that the installation site must be well ventilated.

DANGER!

- Only operate the PCS if it is in a technically faultless condition. Operating a faulty PCS may lead to electric shock or fire.
- Do not attempt to open the enclosure without authorization from SolaX. Unauthorized opening of the enclosure will void the warranty and can result in lethal danger or serious injury due to electric shock.
- Make sure that the PCS is reliably grounded before any operation to prevent the risk of electric shock causing lethal danger or serious injury.
- Only qualified personnel can perform the installation, wiring, maintenance of the PCS by following this document and the related regulations.

DANGER!

- Please make sure that the unit is free from any damage before the electrical connection.
- Do not modify, change, or dismantle the device, do not change the power-on and power-off sequences and the installation procedure written in the document, and please properly and correctly operate it.
- Do not power on the device during installation. Otherwise, it may cause a fire, personal injury, or device damage.
- Must remove earrings, rings, bracelets, watches, and any other metal jewelry before operation, to avoid electrical shock, burns, or even death.
- During operation, special insulated tools must be used to avoid electric shock or short circuit failure. The insulated tools' voltage ratings must exceed the system voltage ratings. Please refer to "12 Technical Data" for system information.

WARNING!

- Please prepare tools that meet the requirements before installation, and check the number of tools after installation, to avoid leaving them inside the equipment.
- Please ensure that the cabinet has been thoroughly secured before operating it. Otherwise, it may cause personal injury or equipment damage due to tilting or collapsing the cabinet.
- Please ensure that the cabinet's vents and cooling system are working properly when it is running. If the vents are blocked, it will lead to overheating, and even equipment damage or fire hazard.
- Please ensure that the cabinet's vents and cooling system are kept away from heat sources.
- Do not drill holes in the device to avoid equipment failure.
- If the circumstances that may cause personal injury or equipment failure occur, such as, fluid flowing into the equipment, stop operation and power off immediately. Otherwise, it may cause a short circuit or damage.
- Do not open the cabinet doors on a rainy or high humid day (≥80% humidity). If the doors have to be opened on such days, please take proper protective measures.

WARNING!

- Please read the document carefully before installation, operation and maintenance.
- Must arrange fire-fighting equipment in advance according to the local laws, regulations, and standards while installing and commissioning the device.
- Please check that there is no damage to the outer packaging before and after unpacking, and in the process of storage and transportation. The battery shall be correctly placed or stacked in accordance with the requirements stipulated on the labels to prevent damaging or scrapping the battery resulting from crushing or falling.
- Must tighten screws securing cables and on the copper bars according to the torque information specified in the document, and check whether they are tightened periodically. For instance, whether there is any rust, corrosion, or any other foreign object on it, and then clean it up if any. Because the loose screw connections may result in excessive voltage drops and large currents, leading to generating a lot of heat and burning the battery.

WARNING!

- The battery should be charged in time after discharge, to prevent battery damage due to overdischarge. If a battery pack is stored for a long time, please periodically recharge it to protect it from damage according to the storage requirements specified in the document.
- Please charge the battery within the specific temperature range because the low temperature may result in a short circuit. Hence, do not charge it when the temperature is below the low limit of the operating temperature.
- Do not use the battery when you find a bulge, or dents on the battery housing, and contact the installer or professional maintenance personnel to dismantle and replace it. The damaged battery must be kept away from other devices and flammable and explosive articles, and do not contact it except for professionals.
- Before operation, ensure that there are no irritating or burning smells around the battery.
- Do not weld or grind near a battery. Because electric sparks or arcs may cause fires.
- Do not step, lead, stand, or set on the battery.

WARNING!

- Operators must wear PPE while installation and maintenance of the device.
- During operation, avoid touching any parts of the PCS other than the LED panel.
- Never connect or disconnect the AC and DC connector while the PCS is running.
- Prior to conducting any maintenance, turn off the AC and DC power and disconnect them from the PCS. Wait for 15 minutes to fully discharge the energy.
- Avoid touching the PCS while it is running, as it becomes hot during operation and may cause personal injuries.

WARNING!

- Please wear PPE, such as, protective clothing, insulating shoes, goggles, safety helmets, insulating gloves, etc., when conducting electrical wiring.
- Do not touch the power supply equipment directly, or through conductors or damp objects.
- Do not touch the parts of the equipment of which warning signs are attached, to avoid personal injury or device damage.

CAUTION!

- Do not use a straight ladder. When electrical work is involved, a wooden ladder or an insulated ladder shall be used.
- The equipment shall not be used to provide a backup power source in the following circumstances:
  a. Equipment related to life;
  b. Sensitive precision instruments;
  c. Home appliances will be faulty in the case of a power failure during operation.

CAUTION!

- Do not power on the device until it has been installed and confirmed by professionals.
- In the event of a fire, evacuate immediately and call the local fire services.

NOTICE!

- The signs and messages on the labels and nameplates attached to the device need to be visible and clear.

NOTICE!

Transportation requirements for battery:

- Relevant qualifications for the transport of dangerous goods must be obtained by the forwarding agent engaged in such businesses, and they must strictly abide by the local regulations for the transport of dangerous goods.
- Please check the battery before transportation. If a battery leaks, smells, or is damaged, do refuse to transport it.
- Please handle gently in the process of loading and unloading, transportation, and moving a battery to prevent bumping, and take effective moisture-proof measures to prevent personal injuries and battery damage.
- Unless otherwise specified, do not transport the batteries, which are classified as dangerous goods, together with food, medicine, or other additives on the same means of transport.

If the battery leaks electrolyte or any other chemical materials, the electrolyte leakage can lead to toxic gases. Therefore, do not contact with them at all times. In case of accidentally coming into contact with them, please do as follows:

- In case of inhalation: Leave the contaminated area immediately, and seek medical attention at once;
- In case of contact with eyes: Rinse eyes with running water for at least 15 minutes, and seek medical attention;
- In case of contact with skin: Wash the contact area thoroughly with soap, and seek medical attention;
- In case of ingestion: Induce vomiting, and seek medical attention.

If a fire breaks out where the battery is installed, please do as follows:

- In case a battery is charging when the fire breaks out, provided it is safe to do so, press the emergency stop button and unplug the power cable;
- In case a battery is not on fire yet, use a water-based fire extinguisher or a carbon dioxide extinguisher to extinguish the fire;
- In case a battery catches fire, do not try to put it out, and evacuate immediately;
- A battery may catch fire when it is heated above 150°C/302°F. If the battery catches fire, please evacuate immediately since it will generate noxious and poisonous gases.

NOTICE!

Recovery of damaged or wasted battery:

- Dispose of the damaged or wasted batteries according to local laws and regulations instead of placing them in the household trash or curbside recycling bins. Otherwise, it may cause environmental pollution or explosions.
- Ensure that the damaged or wasted batteries are not exposed to the following situations: high temperatures, high humidity, direct sunlight, or corrosive environments.
- Contact a battery recycling company to scrap the battery, which leaks electrolytes, or is damaged or expired.
- Please take protective steps to prevent battery short circuits before moving batteries.
- Please keep away from flammable material storage areas, residential areas, and other population centers when transporting and storing the damaged battery.

NOTICE!

- The PCS has an integrated Residual Current Monitoring Unit (RCMU). If an external Residual Current Device (RCD) is required by local regulations, verify the type of RCD required. It is recommended to use a Type-A RCD with a rating of 300 mA unless a lower value is required by the specific local electric codes. When required by local regulations, the use of an RCD type B is permitted.

NOTICE!

- Only connect the PCS to the grid with the permission of the local utility grid company.

NOTICE!

- Please operate according to the safety code for power station.
- Before installation, it is necessary to set up temporary safety fences or warning lines and hang warning signs in the operation area, to prohibit non-staff from entering here.
- Please make sure that the equipment and its associated switches are off before connecting and disconnecting power cables.
- Please check whether the protective housing and insulating sleeve for an electrical component have been installed correctly after finishing installation, to avoid electric shock.
- Must turn off the output switch of the power supply equipment when maintaining its electrical terminal device and power distribution device.
- If the device is required to be powered off during troubleshooting and diagnosis, please do as the following procedure: power off > electricity testing > connecting grounding cable > hanging warning signs and setting up guardrails.
- Must hang up "Do Not Switch On" warning signs on the relevant switches or circuit breakers before completing maintenance, to prevent power connection. Do not switch on before the fault is solved.
- Do not use water, alcohol, oil, or other solvents when cleaning electrical components inside and outside the device.

NOTICE!

Grounding Requirements:

- The device's grounding impedance shall meet the requirements of local electrical safety standards.
- The equipment shall be permanently connected to a grounding wire within the building's electrical system. Please check whether the device is reliably grounded before operation. The grounding cable should be removed last while dismantling and maintaining the device.
- Do not start the device if it is not fitted with a grounding conductor.
- All acts against the grounding conductor are prohibited.
- If the device is equipped with a three-pronged socket, make sure that the ground prong is reliably grounded.
- For the device that may generate large contact currents, please make sure that the grounding terminal on the housing has been grounded before powering on, to avoid electric shock.

Cable Requirements:

- When deciding the wire diameter, and connecting or wiring cables, follow the local laws, regulations, and codes to ensure safety.
- When external conditions (e.g., placement method, ambient temperature, etc.) change, the cable type must be verified according to IEC-60364-5-52 or local laws, regulations and standards. For instance, whether the cable's current-carrying capacity meets the requirements.
- Before connecting power cables, please make sure that the cable labels are correctly labelled and the cable terminals are well insulated.
- Do not loop and twist cables while conducting electrical wiring. If the length of the power cable is not enough, please replace it instead of joining or welding. Ensure that all the cables of the correct type and size are fully connected and well insulated, and the edges of cable slots and crossing holes are smooth.
- It is recommended to bundle similar cables with cable ties, to ensure that the inside of the device is neat and tidy and to avoid cable jacket damage.
- Please use fireproof mud to seal the threading openings immediately after finishing wiring, to avoid the entry of water vapour or small animals.
- Cables should be kept away from heaters or other heat sources, because a high temperature environment may result in aging and damage to cable insulation.

Packing List

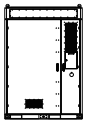
Cabinet x 1

A

Angle support x 4

B
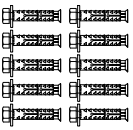
Expansion bolt x 10

C
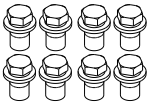
M12*40 hexagon head screw x 8

D
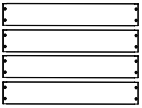
Cover x 4

E

M6*16 Hexalobular socket screw x 18

F
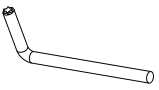
Hexalobular key x 1

G

M24 eye bolt x 4

H
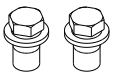
M10*30 hexagon head screw x 2

I
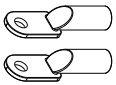
TLK50-10 ring terminal (cabinet side) x 2

J
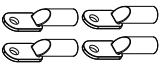
TLK70-8 ring terminal (Grid side) x 4

K
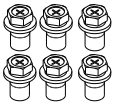
M8*16 hexagon head screw x 6

L

TLK35-8 ring terminal (Grid side) x 1

M

Fireproof mud x 2

N

Antenna x 1

O*
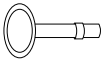
Key (to open screen) x 1

P*

Key (to open cabinet door) x 2

Q*

Allen key x 1

NOTICE!

- The mark "*" indicates that these keys are collected into a bunch.

Installation Site

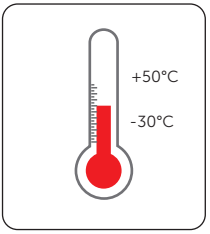

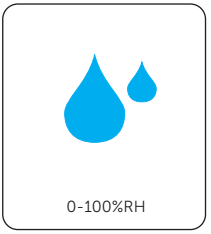

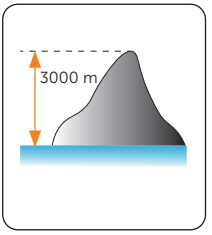

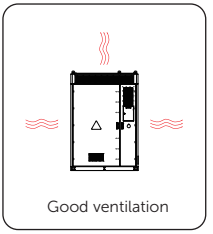















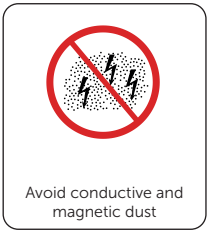





Installation Site	Distance
Distance from coastal areas	> 2000 m
Distance from heavy pollution sources, such as smelters, coal mines, thermal power plants	> 1500 m
Distance from moderate pollution sources, such as chemical plants, rubber plants, and electroplate factory	> 1000 m
Distance from light pollution sources, such as food processing plants, leather processing plants, heating boiler factory, slaughter houses, dumping sites, and sewage treatment stations	> 500 m

Transportation Requirement

Forklift Requirement

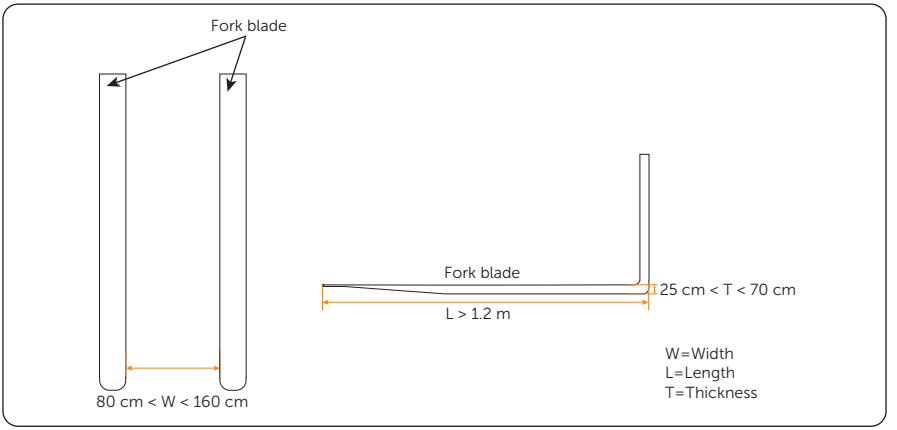

Carton Fork Holes

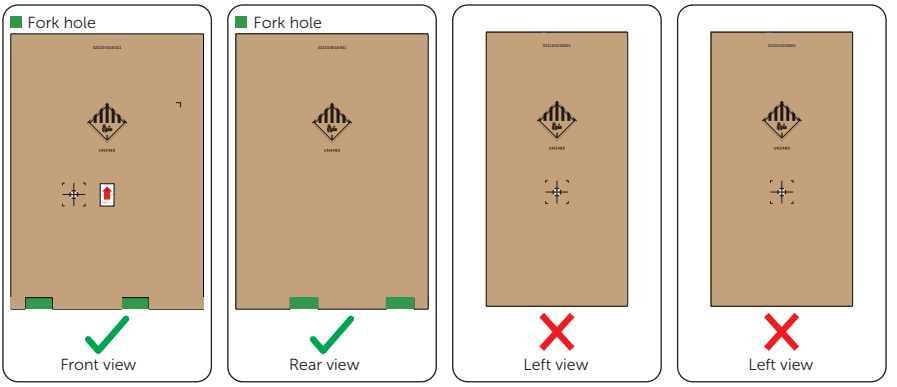

Angle supports installed at front and rear sides

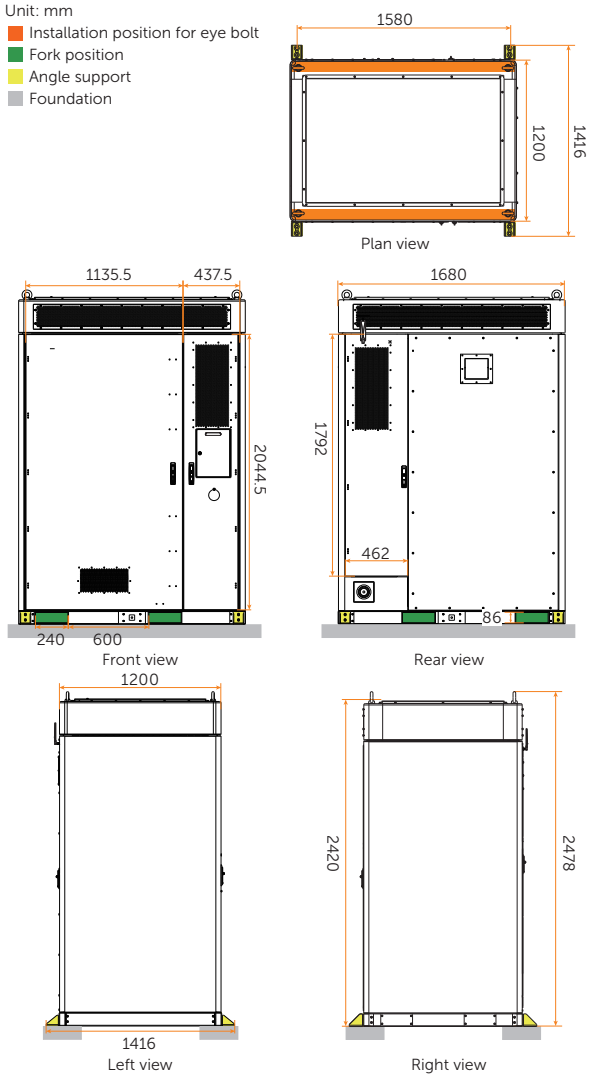

Angle supports installed at left and right sides

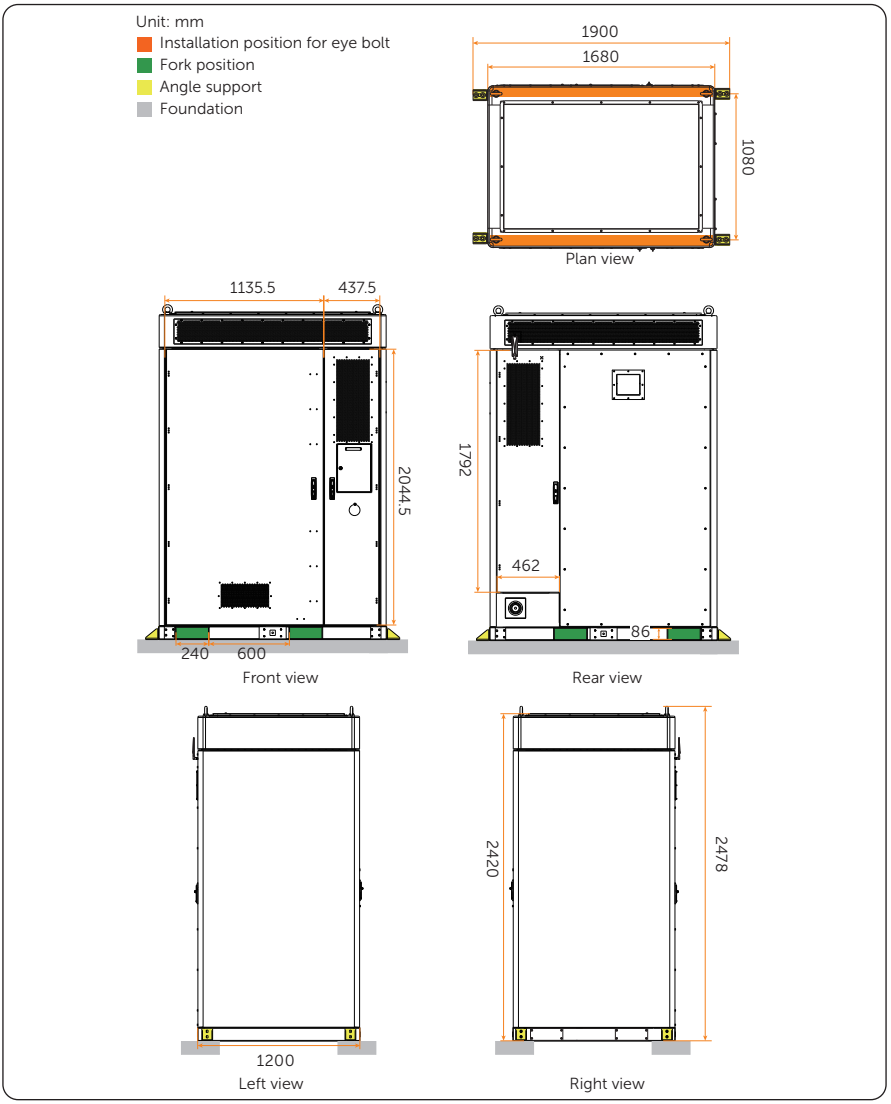

Installation Foundation Requirement

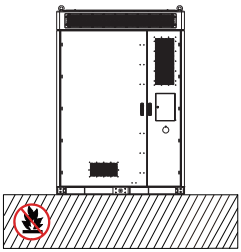

Fireproof

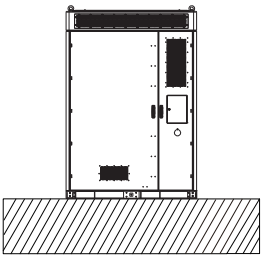

Bearing capacity > 5 t

Concrete foundation

Foundation parameter requirements for angle supports at front and rear sides

Unit: mm

Foundation

Angle support

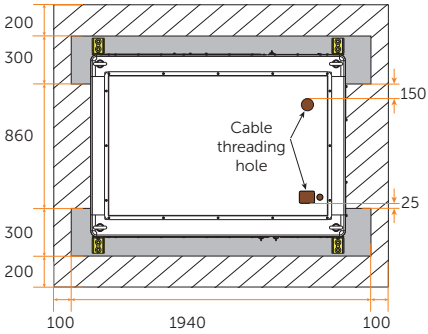

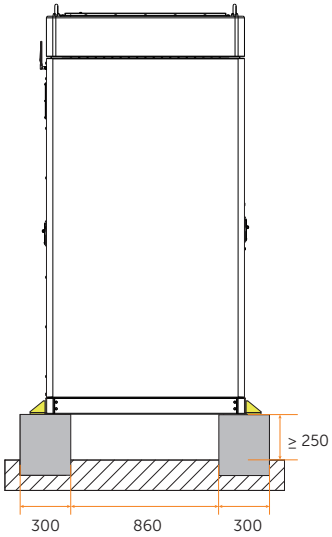

Note: The recommended foundation height is 300 mm.

Foundation parameter requirements for angle supports at left and right sides

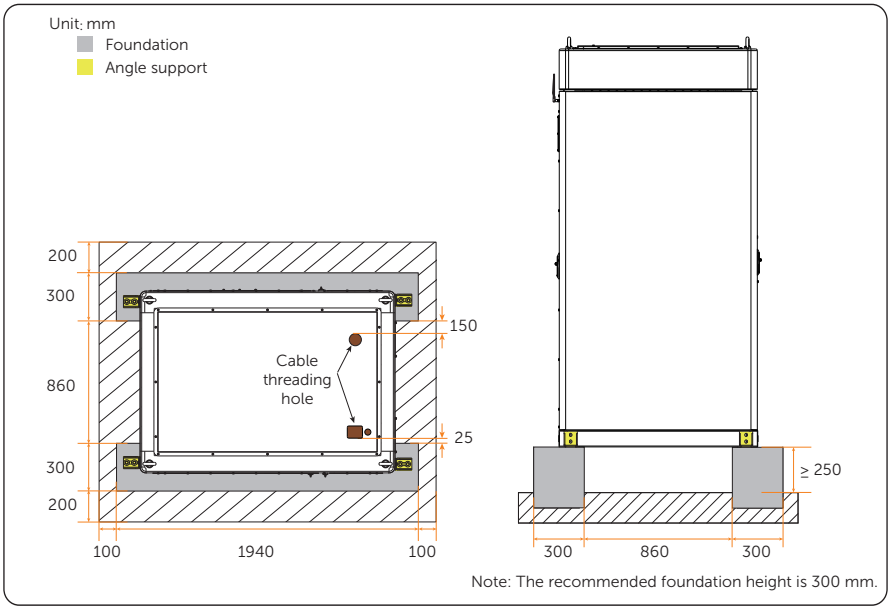

Note: The recommended foundation height is 300 mm.

Foundation parameter requirements for angle supports at left and right sides

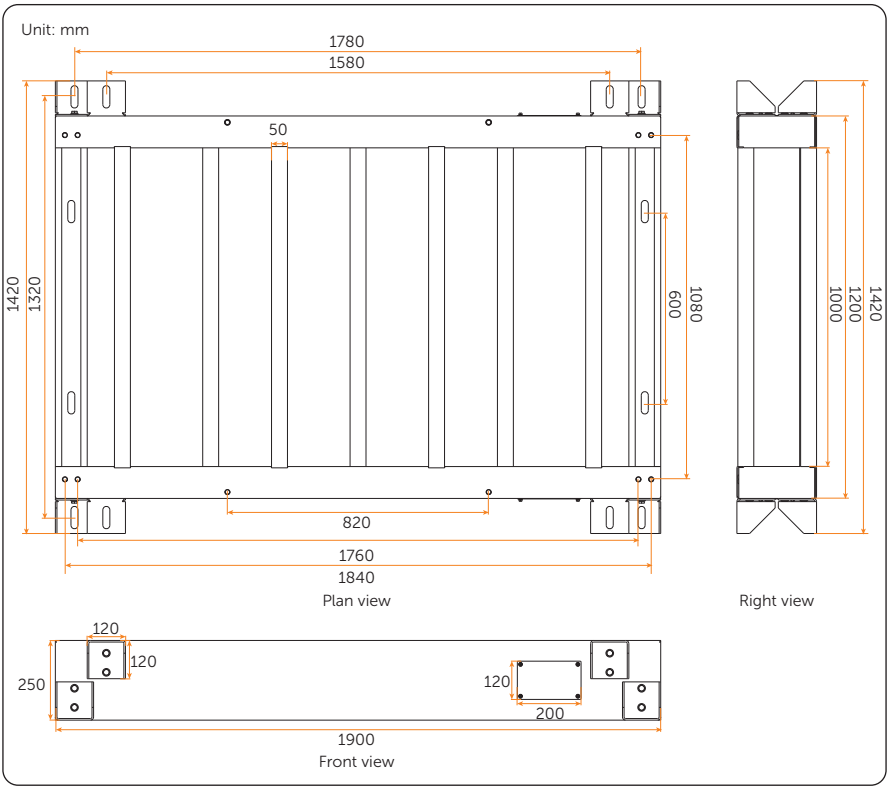

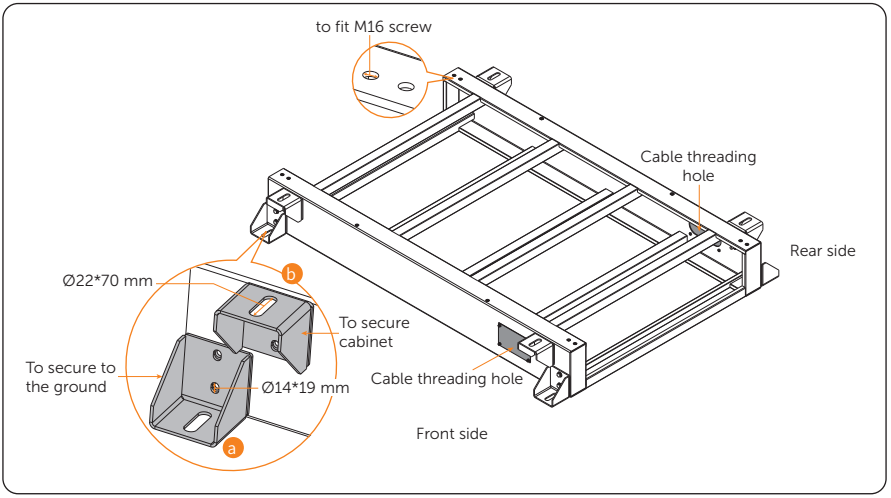

Unit: mm

Foundation

Angle support

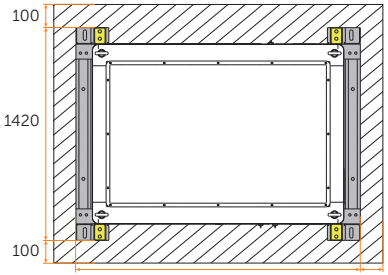

Plan view

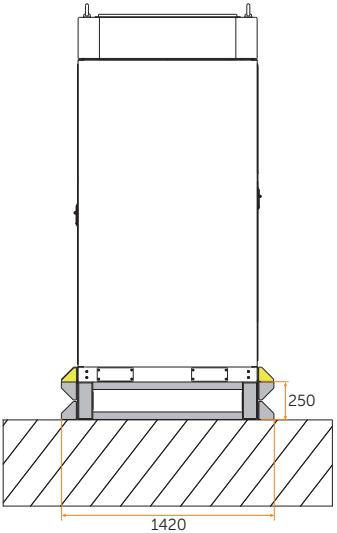

Right view

Unit: mm

Foundation

Angle support

Note: If the cabinet's angle supports are installed at left and right sides, the foundation's angle supports, which are designed to secure the cabinet, may not be installed.

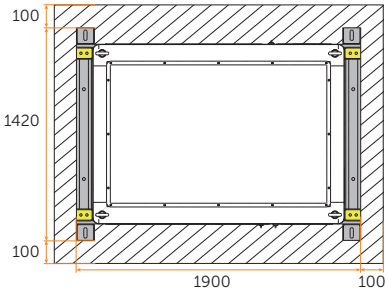

Plan view

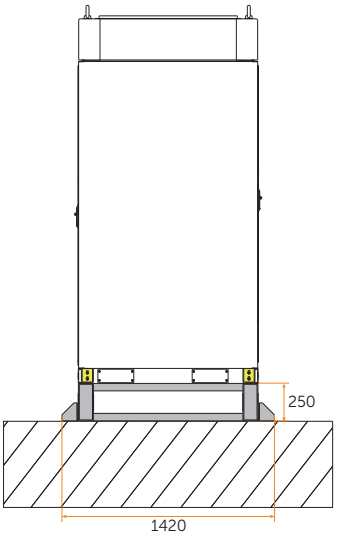

Right view

NOTICE!

After completing construction of the steel foundation, please strictly comply with the following steps:

a. Install the bottom angle support first to secure the foundation to the ground;
b. Install the top angle support (if any);
c. Finally, install the cabinet onto the steel foundation.

Clearance Requirement

The device support the following installation options:

1. A single cabinet, see Figures 1 and 2);
2. Multiple cabinets, see Figures 3 and 4):

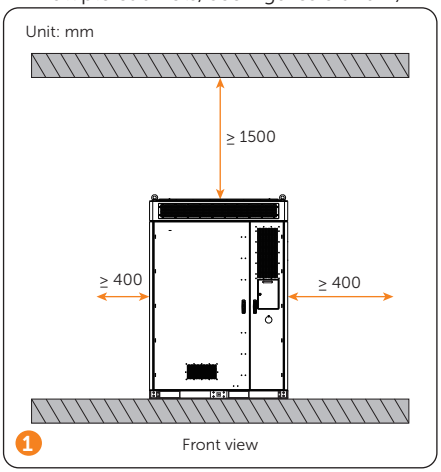

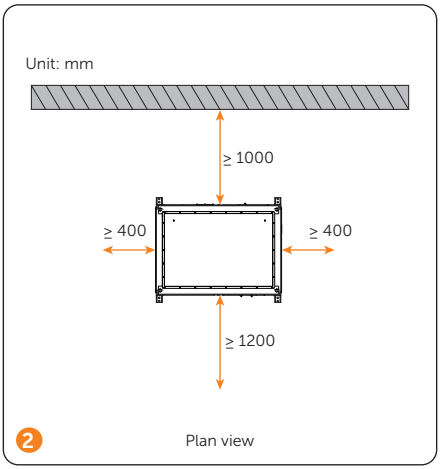

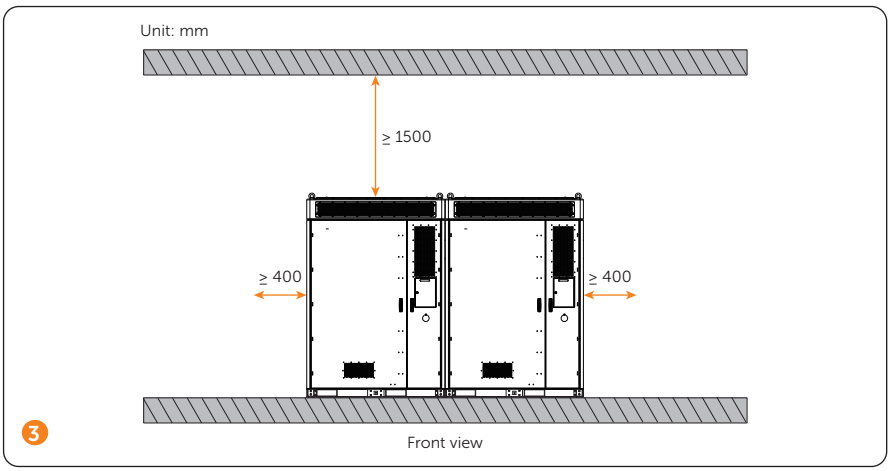

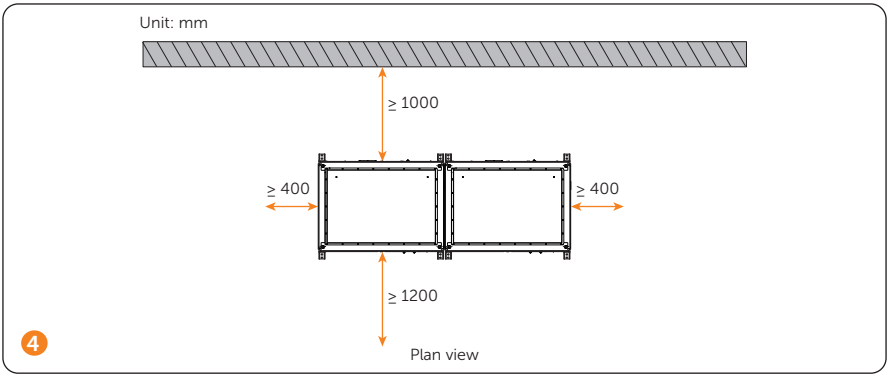

4

Installation Tools

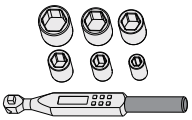
Torque wrench (M4~M12)


Steel pipe
Ø25~30 mm


Marker


Vacuum cleaner


Hammer drill (Ø18 mm)

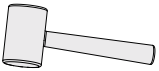
Rubber mallet

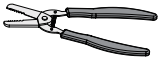
Wire stripper

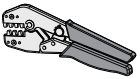
Crimping tool

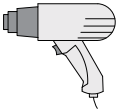
Heat gun

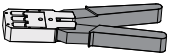
Crimping tool for RJ45

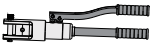
Hydraulic wire crimper

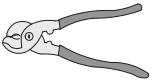
Wire cutter


Utility knife

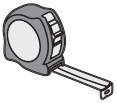
Measuring tape

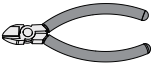
Diagonal pliers


Heat shrink tubing
(Ø30~60 mm)


Cable tie


Insulated ladder

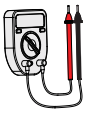
Multimeter
(Range: 1500 V)


Safety belt



Crane



Steel wire rope
Length > 2000 mm x 4



Electric forklift



Safety helmet



Safety vest

Additionally Required Materials



Grounding plate
(Galvanized iron plate)
Width: 40 mm
Depth: 4 mm



Grid wire
(Five-core copper cable)
70 mm^2*4 + 35 mm^2 * 1



Additional PE wire
(Conventional yellow and
green wire) 50 mm^2



Ethernet cable
(CAT 5E)



RJ45

Mechanical Installation

WARNING!

- Do not destroy the cabinet's anti-corrosion coating during the process of installation.

NOTICE!

- There are two ways to move a cabinet: using a crane or a forklift. If the eye bolts are required to be installed based on the actual situation, please strictly follow the steps below.

Installation of Eye Bolt

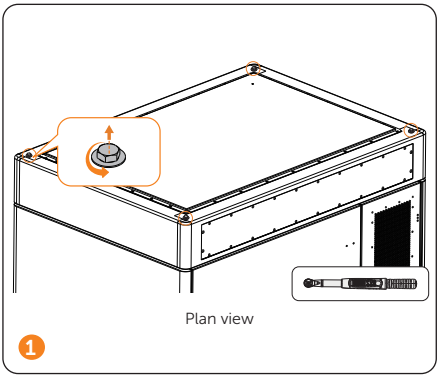

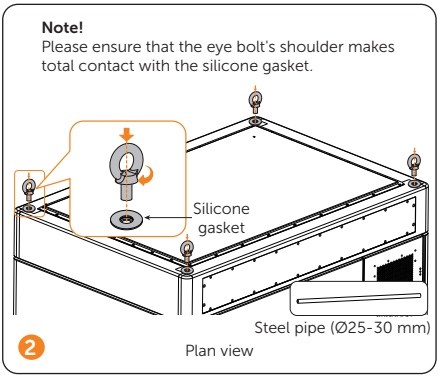

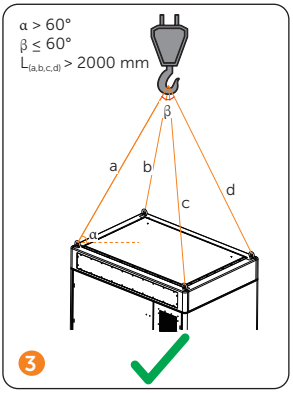

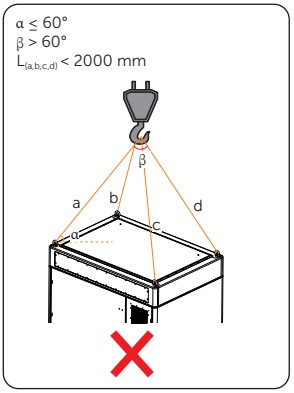

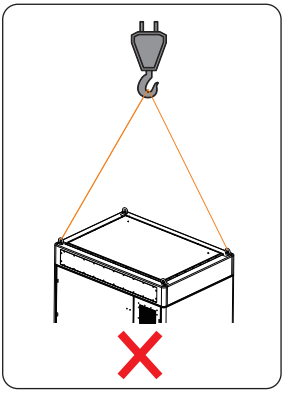

NOTICE!

- Put the silicone qaskets in place before inserting the eye bolts.

Forklift Handling

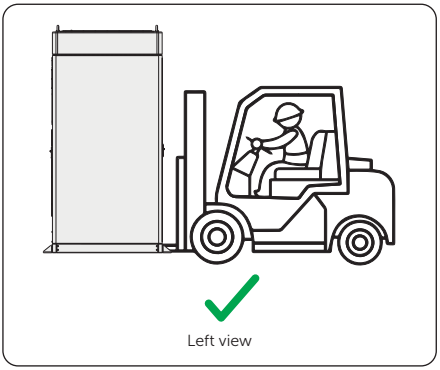

Left view

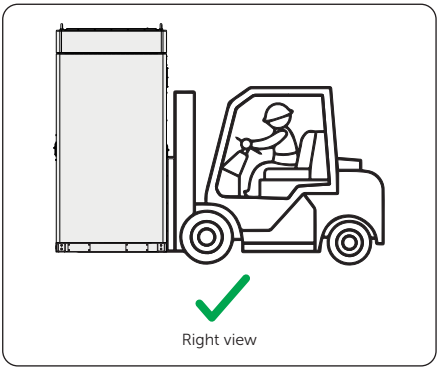

Right view

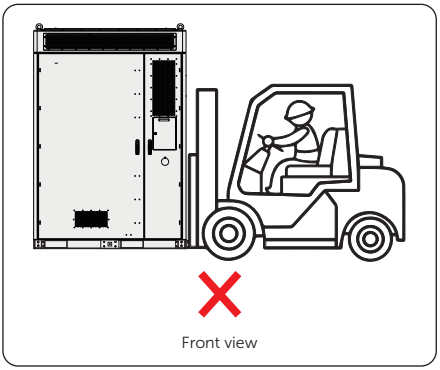

Front view

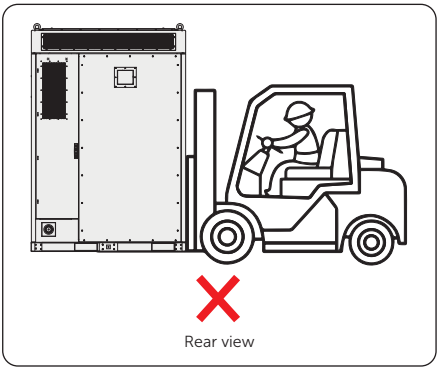

Rear view

Installation of Angle support and Cover

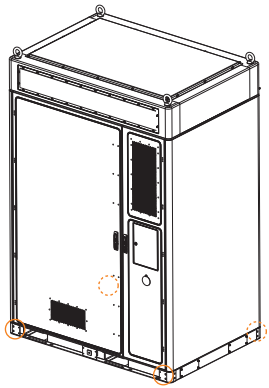

The cabinet allows the angle supports to be installed at the front and-rear sides or at the left and-right sides. Since the installation procedure for the angle support is the same, take the angle support installed at the front and-rear sides, for instance.

1

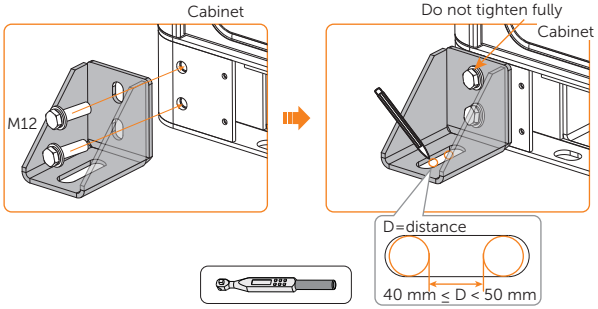

2

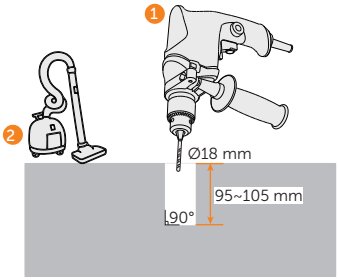

3

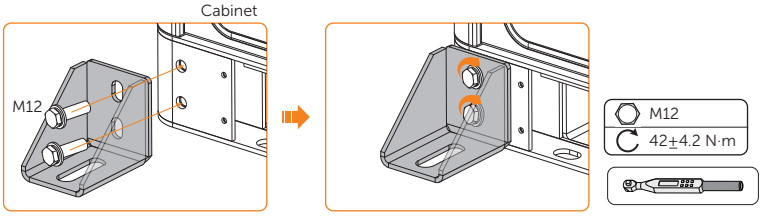

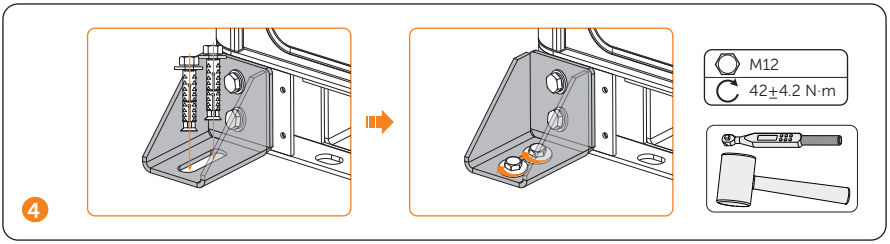

4

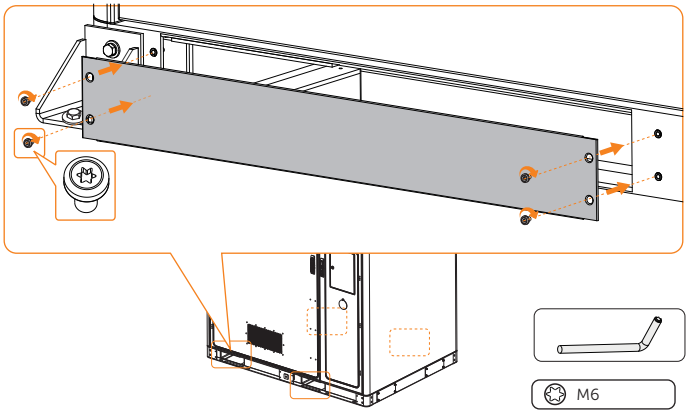

5 Each cover has 4 screws, with a total of 4 covers.

NOTICE!

- The above-mentioned installation steps also apply to the angle supports, which are installed on both the left and right sides.

Installation of Antenna

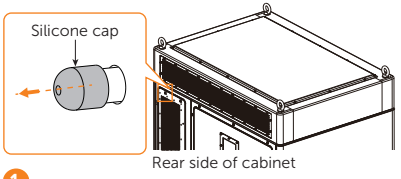

1

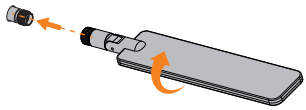

2

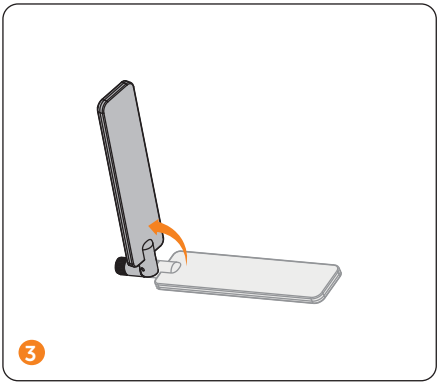

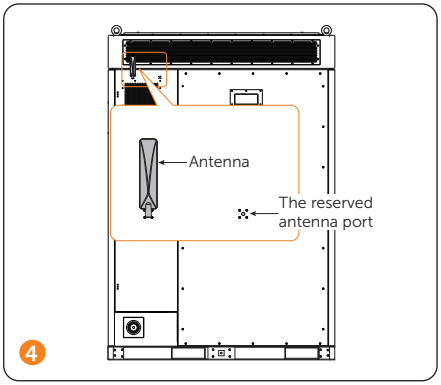

NOTICE!

- The user can decide whether the reserved port connects an antenna based on the actual situation.
- Regarding the other antenna port (the right one), the antenna is delivered with the accessories kit.

Electrical Connection

Wiring area

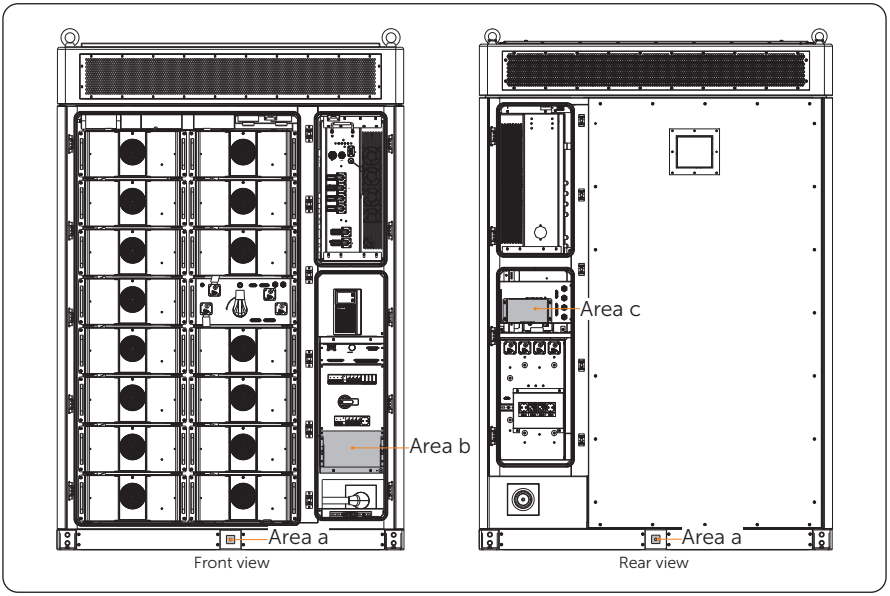

Wiring area	Description
Area a	To connect grounding plate or PE wire.
Area b	To connect GRID wires.
Area c	To connect Ethernet cable to Internet.

Grounding Connection

Grounding plate connection

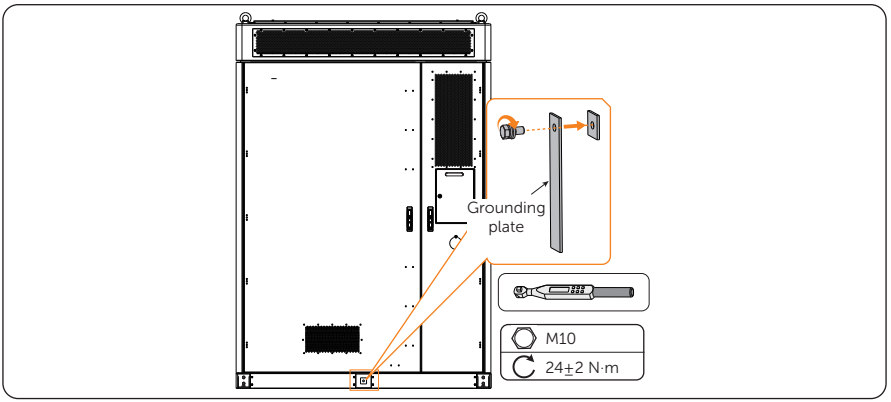

PE connection

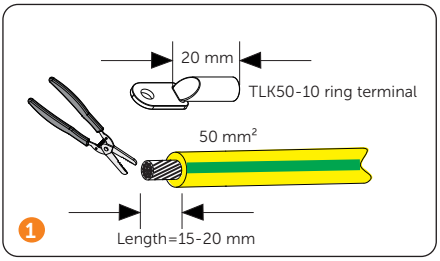

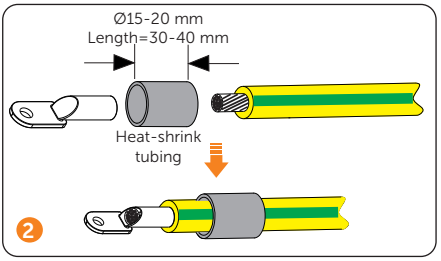

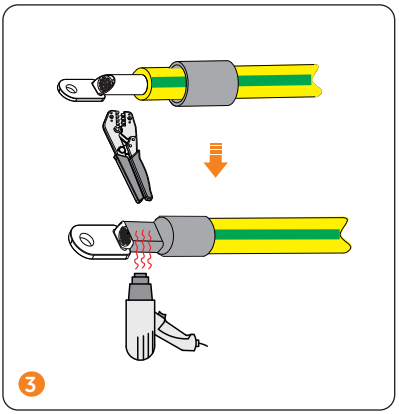

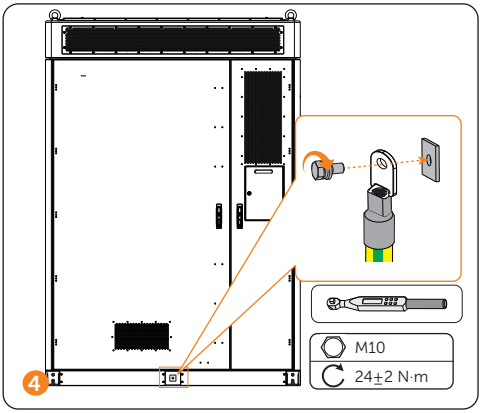

Grid Connection

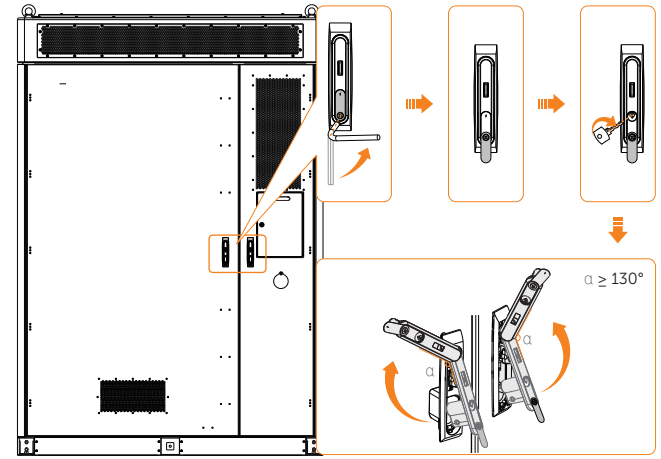

1

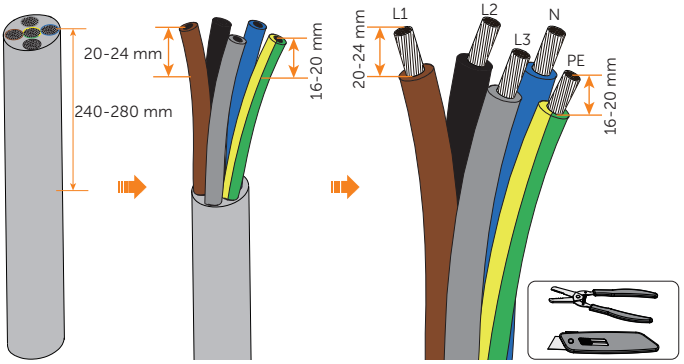

Cable	Cross-sectional area	Strip length
Five-core cable	/	240-280 mm
L1/L2/L3/N	70 mm^2	20-24 mm
PE	35 mm^2	16-20 mm

2

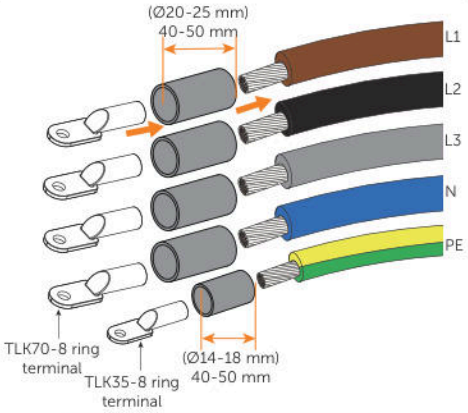

Cable	Heat shrink tubing	
	Diameter	Length
L1/L2/L3/N	Ø20-25 mm	40-50 mm
PE	Ø14-18 mm	40-50 mm

3

Since the procedure for installing a terminal is same,take the L1 copper wire, for instance.

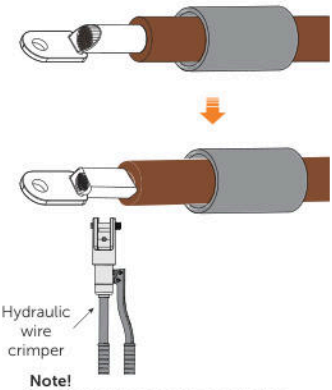

Note!

1. Do not damage the conductor insulation while crimping.
2. Do not place the conductor insulation into the terminal.

4

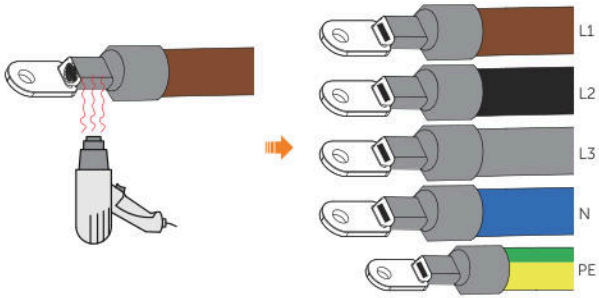

4

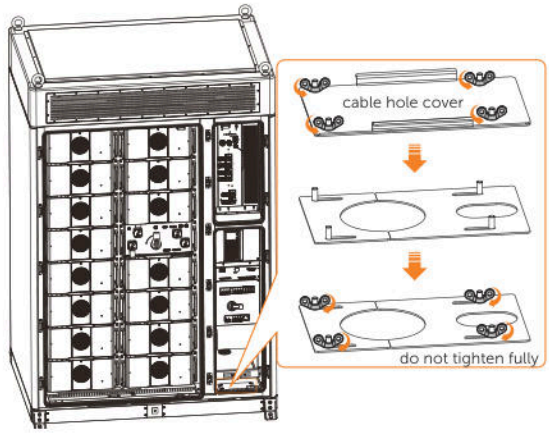

6

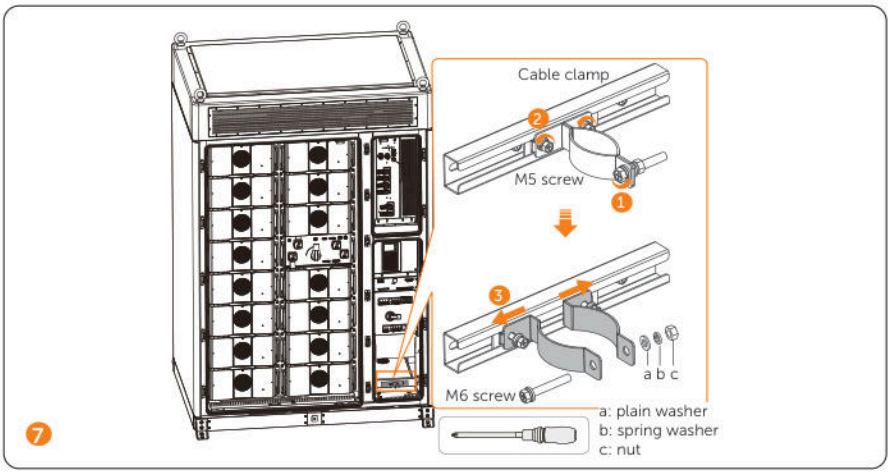
Cable clamp
M5 screw
M6 screw
a b c
a: plain washer
b: spring washer
c: nut
7

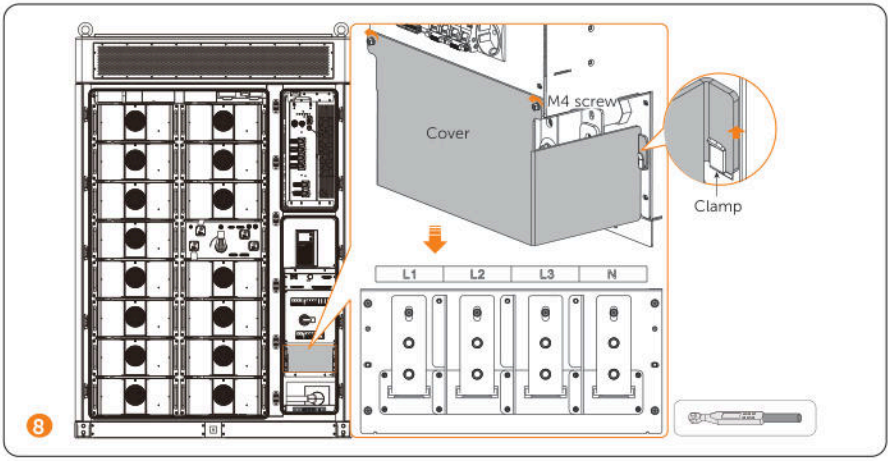
Cover
M4 screw
Clamp
L1
L2
L3
N
8

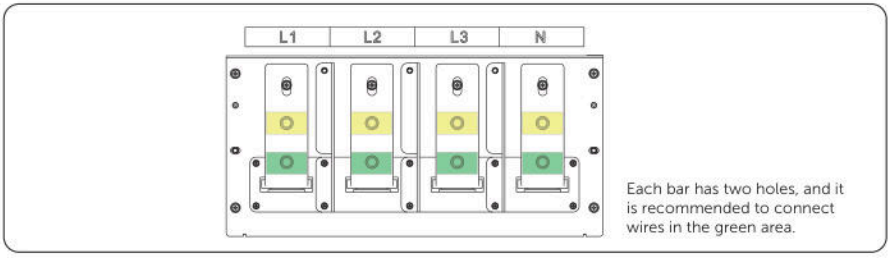
L1
L2
L3
N
Each bar has two holes, and it is recommended to connect wires in the green area.

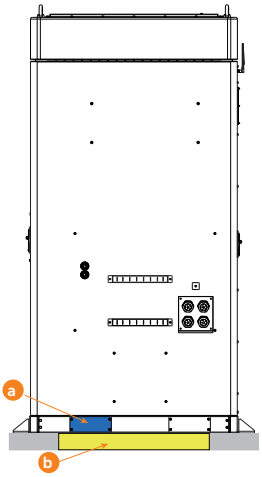

9 Right view

There are two options (a and b) for pulling through cables.

- In the case of **option a**, unscrew hexalobular socket screws to remove cover. See following figure.



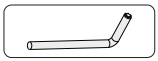

- In the case of **option b**, pull cable directly through the bottom of the cabinet.

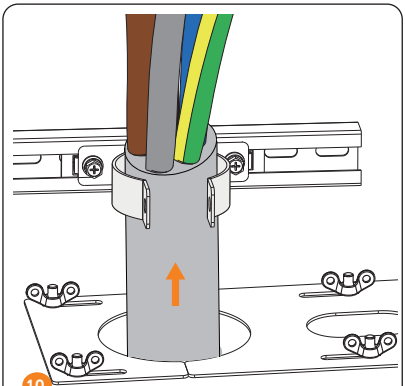

10

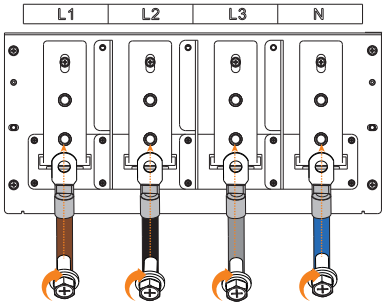

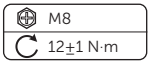

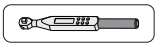

11

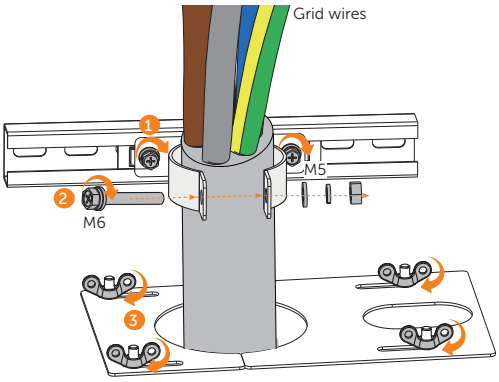

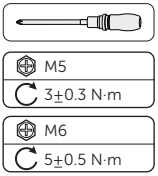

12

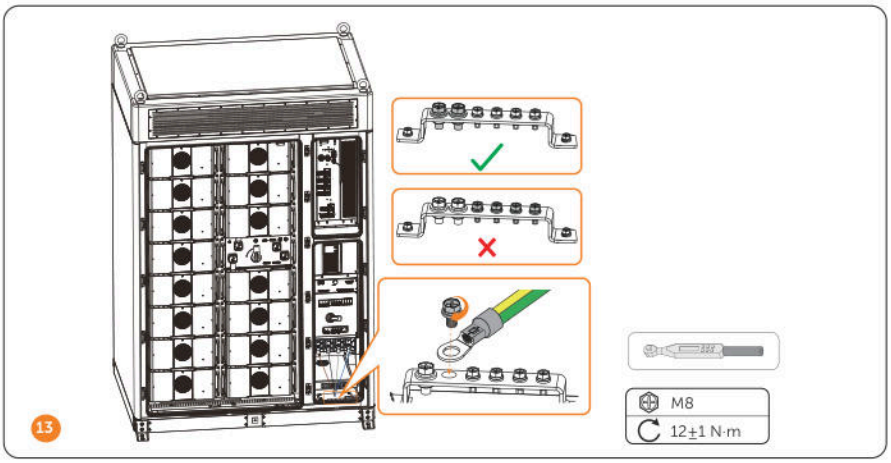
13
M8
12±1 N·m

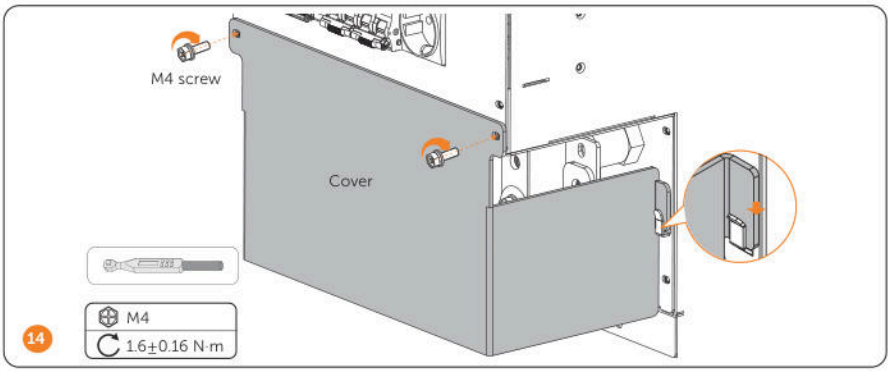
M4 screw
Cover
14
M4
1.6±0.16 N·m

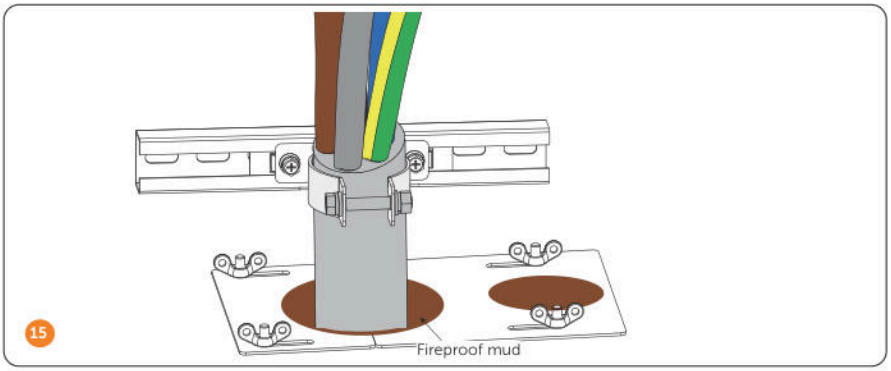
15
Fireproof mud

NOTICE!

Notice for fireproofing mud:

- Take out the fireproof mud delivered with the cabinet and knead it into a ball shape. In the case of the low temperature, place it into warm water, of which the temperature range is between 40°C and 70 °C, with its package until it is soft.
- Clean the area around the cable threading hole before sealing it.
- The fireproof mud should be evenly spread, embedded, or filled in the cable threading hole. If such a hole is too large, a fireproofing board can be placed to enhance fire protection before using the mud.
- The fireproof mud needs to be cured after sealing the cable threading hole. Prevent water from entering and colliding during curing.

Device Networking

4G SIM card

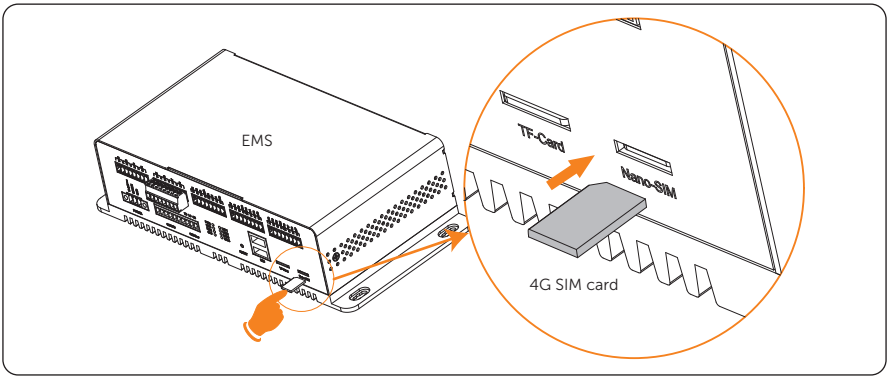

Connection of Ethernet cable to internet

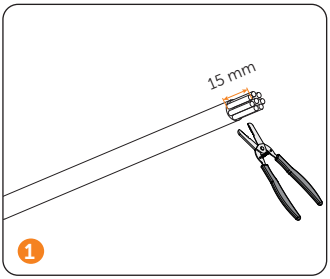

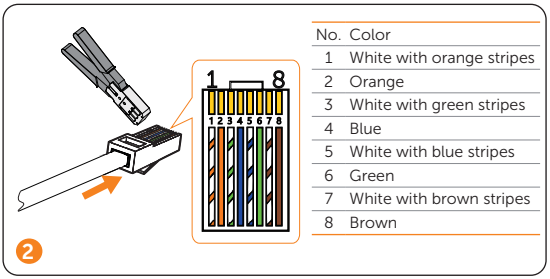

No.	Color
1	White with orange stripes
2	Orange
3	White with green stripes
4	Blue
5	White with blue stripes
6	Green
7	White with brown stripes
8	Brown

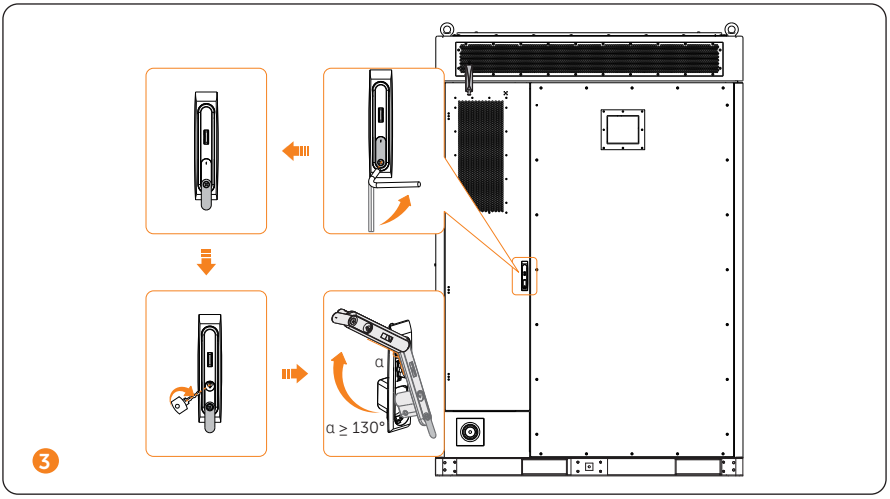
α
α ≥ 130°
3

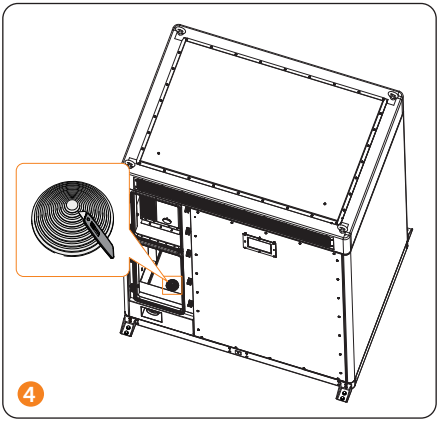
4

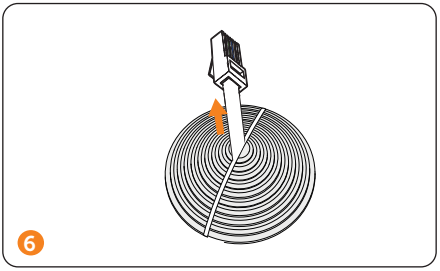
6

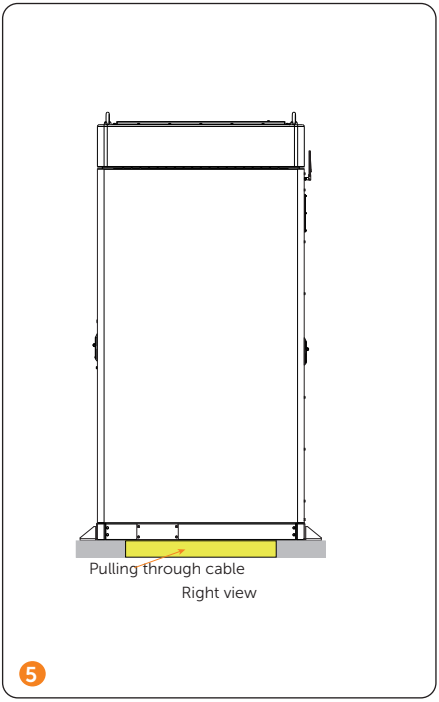
Pulling through cable
Right view
5

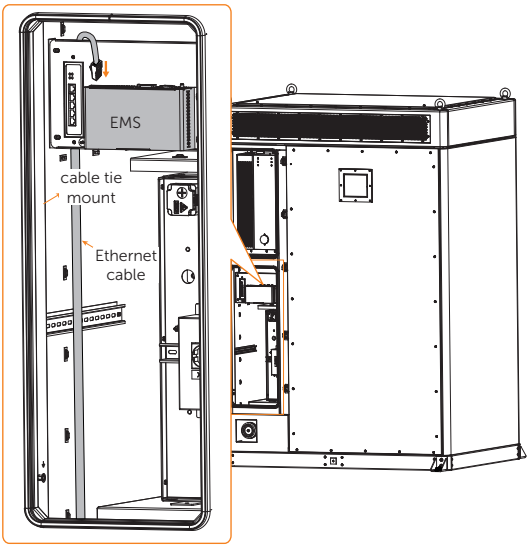

7

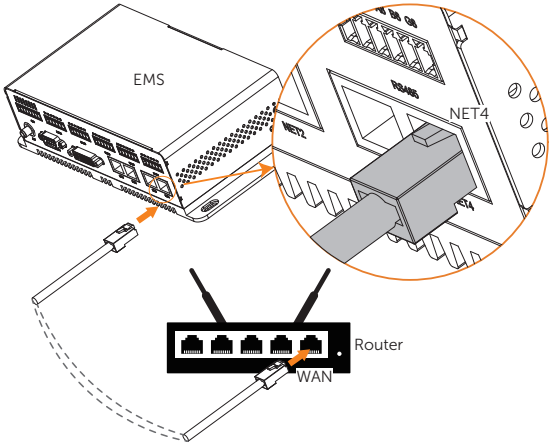

8

Power on the System

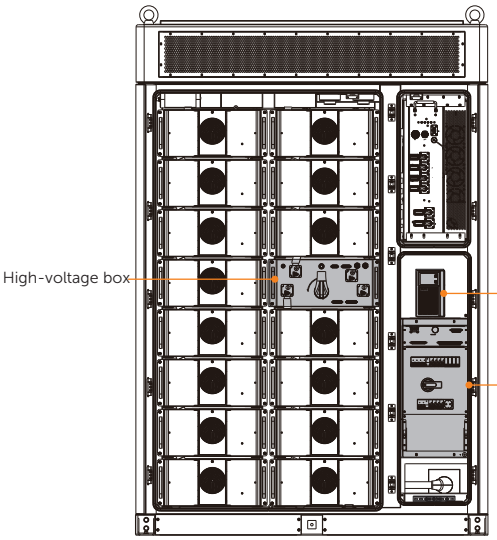

NOTICE!

- Please check that the emergency stop button remains in the closed position before powering on.

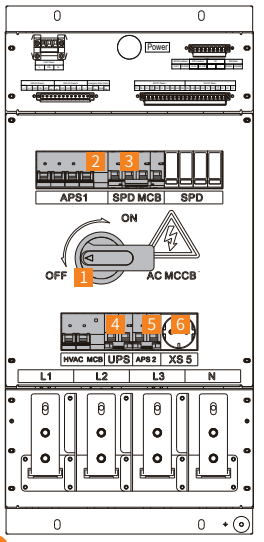

1 Distribution box

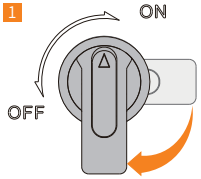

Switch

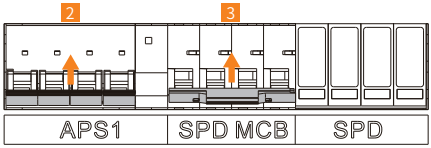

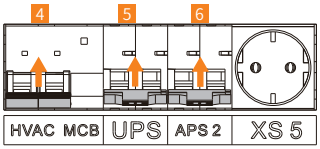

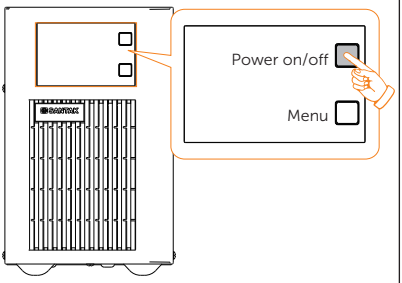

UPS

2

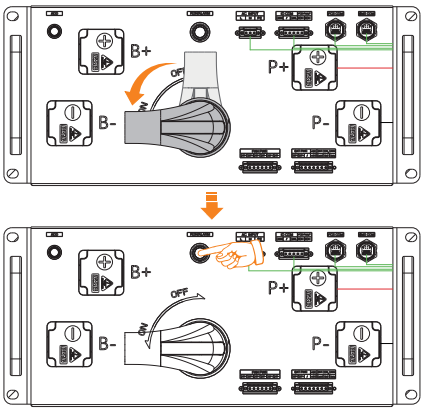

3 High-voltage box

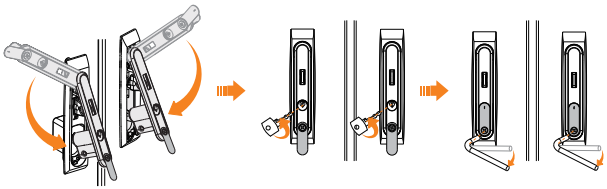

4 **Note:** Please properly keep the keys.

EMS Setup

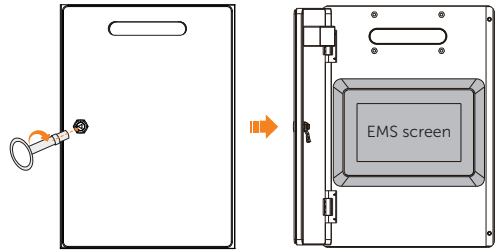

1 Screen door

Username	Password
User	123456 by default
Admin	EMS Registration No.

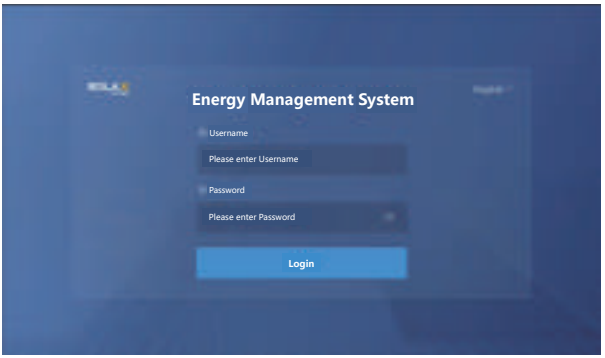

2



3 Pairing device

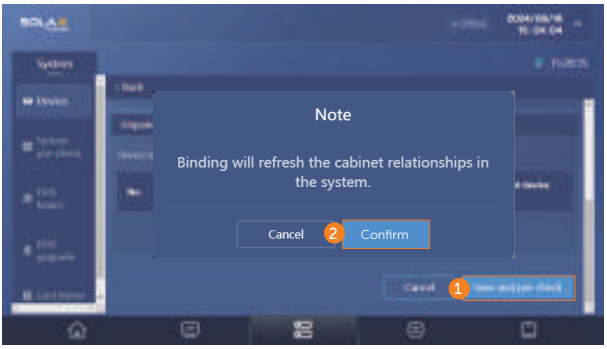

4

SolaXCloud Download

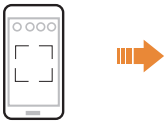



App Store / Google play



SolaXCloud

Scan the QR code to download SolaXCloud App. Follow the tutorial or online documents on the SolaXCloud App to complete the configuration.

Power off the System

There are two circumstances: 1. Normal power off; 2. Emergency power off.

Normal Power Off

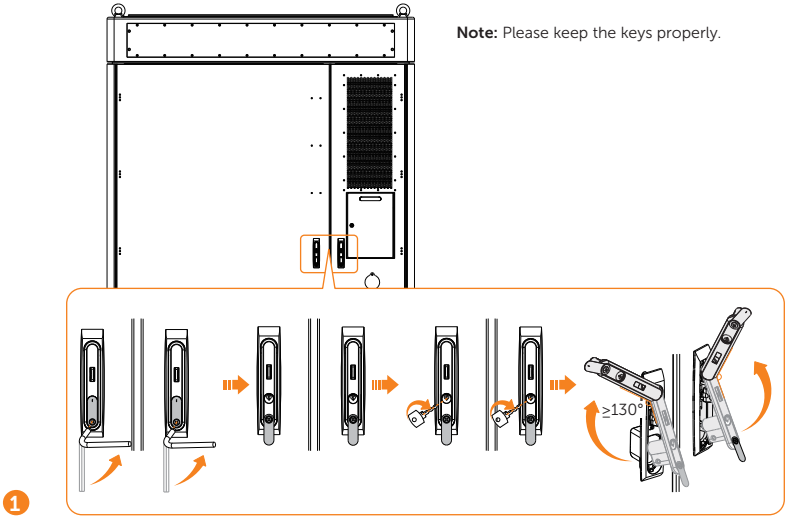

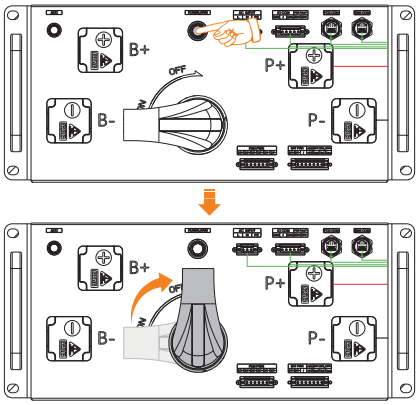

High Voltage Box

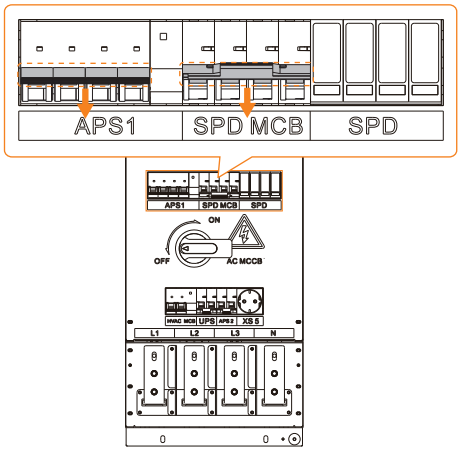

3 Distribution box

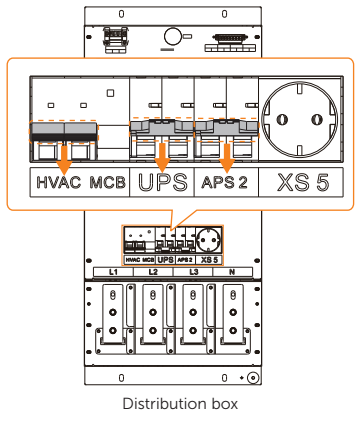

4 Distribution box

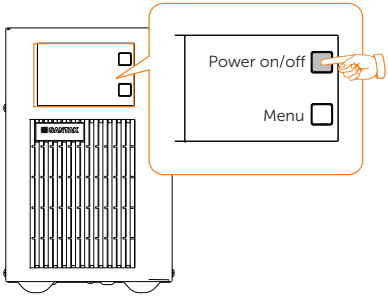

5 UPS

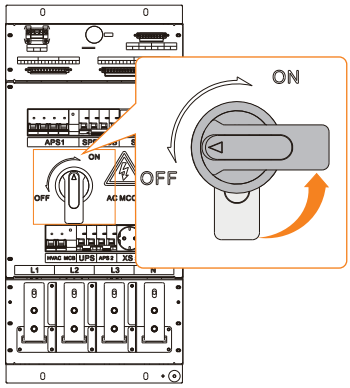

6 Distribution box

WARNING!

- The device may still have power and heat after turning off, which may cause electric shock and personal injuries. Therefore, please allow it to cool for at least 15 minutes and wear PPE before conducting maintenance.

Emergency Power Off

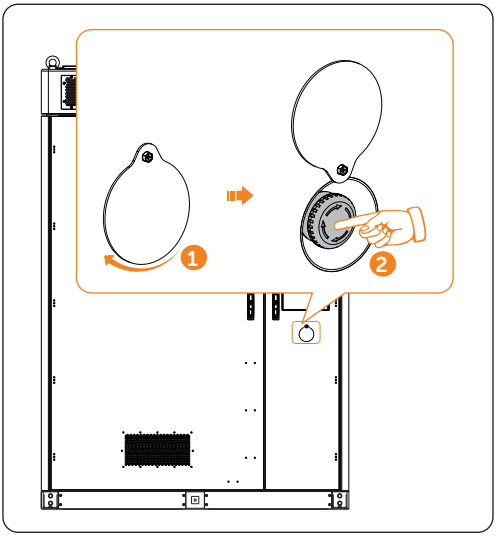

WARNING!

- Do not press the emergency stop button except for emergencies.

NOTICE!

- If it has been pressed, the emergency stop button must be reset before starting the equipment. The reset steps are shown as follows:
  a. Rotate the cover;
  b. Rotate the button according to the arrow direction shown on the button. Then the button will spring back to its original position.

LED Indicators

Cabinet's LED Light

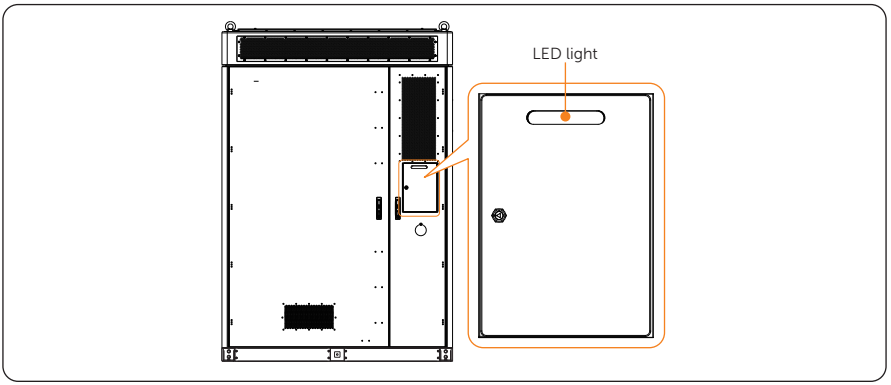

Status		Description
Solid yellow light		In standby
Solid green light		In operation
Solid red light		System failure

High-voltage Box's LED Light

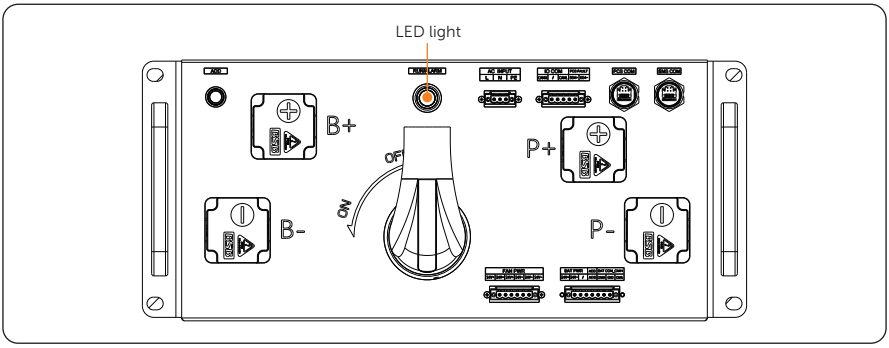

Status		Description
Flashing green light		Rely is off.
Solid green light		In operation
Solid red light		System failure

Battery Pack's LED Light

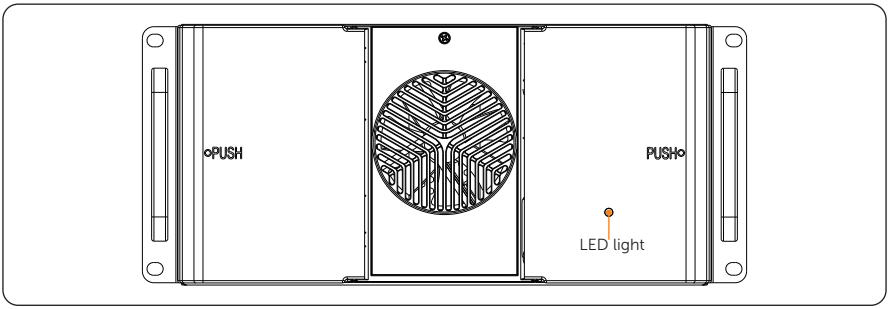

Status		Description
Flashing green light		In operation

PCS's LED Light

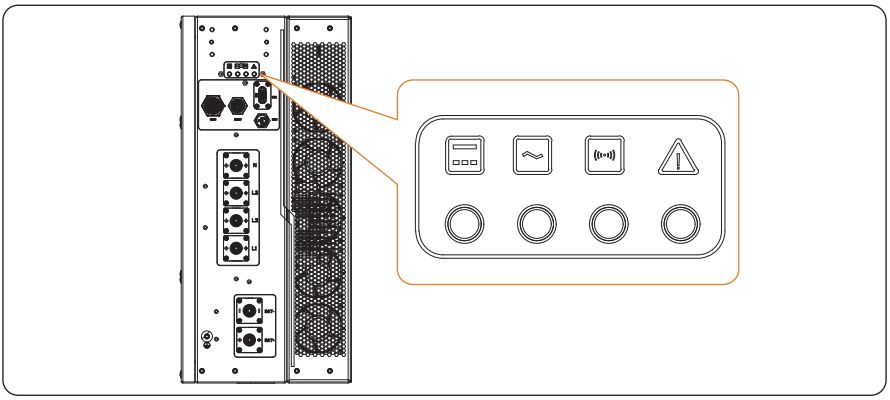

LED Indicator	Status		Definition
DC		Light on	PCS on-grid operation
		Blinking (Slow)	BMS failure
		Blinking (Fast)	When the red light is on, there is a DC side fault of the PCS. When the red light is off, the DC side battery status of the PCS is normal.
		Light off	DC not connected on battery side.
AC		Light on	PCS on-grid operation
		Blinking (Fast)	When the red light is on, there is a fault on the AC side of the PCS. When the red light is off, the AC side grid status of the PCS is normal.
		Light off	Grid not connected
COMM		Light on	Monitoring communication normal BMS communication normal
		Blinking (Slow)	BMS communication abnormal
		Blinking (Fast)	Monitoring communication abnormal
FAULT		Light on	The PCS is in a fault state.
		Blinking	The PCS is in aging mode.
		Light off	The PCS is normal.

UPS's LCD

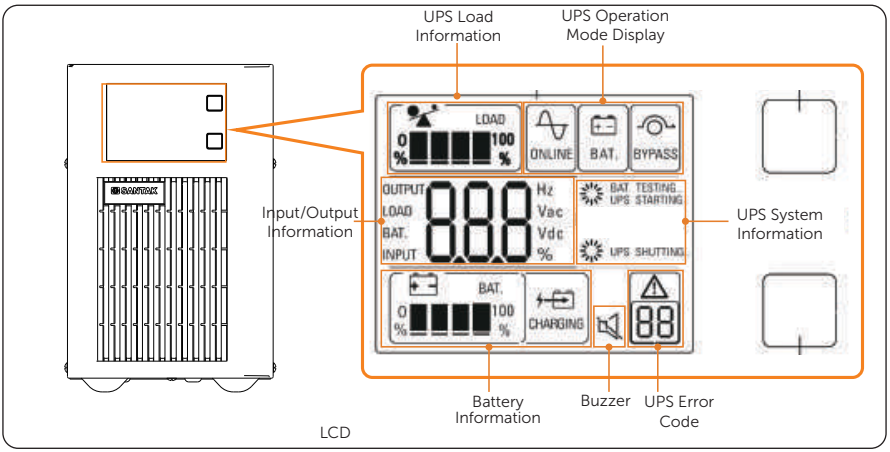

Display		Description
Input/Output Information		It indicates input and output voltage/frequency value, which are displayed alternately. It also indicate load per cent and battery voltage value.
UPS Operation Mode Display		It indicates UPS operating mode.
Load information		Indicates the load level. Each grid represents the level of 25%. If UPS is overloaded, the icon would flash once time per second.
Battery Information		Indicates the battery capacity. Every grid represents the capacity of 25%. If the battery charger is running, the icon would show.
Buzzer		The icon will be displayed after panel key operation or serial command mute.
		The icon will be displayed when the buzzer sounds normally.
UPS Error Code		Indicates the UPS is in Fault mode or has some warnings. Indicates Fault kind or Warning kind, several warning kinds at the same time could be displayed alternately. The icon would falsh when having warnings. The icon would show continuous when in Fault mode.
UPS System Information		Indicates UPS system information

Technical Data

Cabinet (AC Side)

Model	TRENE-P100B215
Rated AC power [kW]	100
Rated AC current [A]	144.4
Max. AC apparent power [kVA]	110
Nominal grid voltage [V]	400 (-20% ~ +15%)
Nominal grid frequency [Hz]	50 / 60
Adjustable power factor range	0.99 leading ~ 0.99 lagging
THDi (Rated power) [%]	< 3
Max. efficiency [%]	98%
DC side anticipated short circuit current [A]	8500
AC side anticipated short circuit current [kA]	8
AC transient short-circuit current [A]	<350 (Duration: 4 ms)

Battery

Model	TRENE-P100B215
Battery type	LiFePO4
Battery capacity [kWh]	215
Rated battery voltage [V]	768
Battery voltage range [V]	600 ~ 876
Discharge depth [%]	90
Rated charge/discharge current [A]	140

General Parameter

Model	TRENE-P100B215
Dimension (W×H×D) [mm]	1680 × 2420 × 1200
Weight [kg]	2800
Operating temperature range [°C]	-30 ~ 50
Relative humidity (Non-condensing) [%]	0 ~ 95
Altitude [m]	3000
Cooling concept	Smart air cooling
Ingress protection	IP55
Fire protection	Aerosol (Optional: Novec1230) / Water
Topology	Non-isolated
Certificates	IEC 62619, IEC 63056:2000, IEC 61000, IEC 62477-1, UN 38.3, GB/T 36276, GB/T 34131

TRENE-B215

Product Name	TRENE-B215
Battery Designation	IFpP74/175/208[(16S)15S]M/-20+50/95
Battery Type	LiFePO4
Rated Capacity [Ah]	280
Cell Manufacturer	A
Rated DC Voltage [d.c.V]	768
Rated Energy [kWh]	215
DC Voltage Range [d.c.V]	636 ~ 876
Max. Charge/Discharge Current [A]	140
Conditional Short-circuit Current (Icc) [A]	< 10000
Output Short-circuit Current [A]	4500 (Duration: 1.3 ms)
Charge Temperature [°C]	0 ~ 50
Discharge Temperature [°C]	-20 ~ 50
Storage Temperature [°C]	50 ~ 60 (3 months); 30 ~ 50 (6 months); -20 ~ 30 (12 months)
Altitude [m]	< 3000
Ingress Protection	IP55
Protection Class	I
Certificates	IEC 62619, IEC 63056

Contact Information

UNITED KINGDOM
Unit C-D Riversdale House, Riversdale Road, Atherstone, CV9 1FA
+44 (0) 2476 586 998
service.uk@solaxpower.com

AUSTRALIA
21 Nicholas Dr, Dandenong South VIC 3175
+61 1300 476 529
service@solaxpower.com.au

TURKEY
Fevzi Çakmak mah. aslım cd. no 88 A Karatay / Konya / Türkiye
service.tr@solaxpower.com

GERMANY
Am Tullnaupark 8, 90402 Nürnberg, Germany
+49 (0) 6142 4091 664
service.eu@solaxpower.com
service.dach@solaxpower.com

USA
3780 Kilroy Airport Way, Suite 200, Long Beach, CA, US 90806
+1 (408) 690 9464
info@solaxpower.com

NETHERLANDS
Twekkeler-Es 15 7547 ST Enschede
+31 (0) 8527 37932
service.eu@solaxpower.com
service.bnl@solaxpower.com

POLAND
WARSAW AL. JANA P. II 27. POST
+48 662 430 292
service.pl@solaxpower.com

SPAIN
+34 9373 79607
tecnico@solaxpower.com

ITALY
+39 011 19800998
support@solaxpower.it

BRAZIL
+55 (34) 9667 0319
info@solaxpower.com

PAKISTAN
service.pk@solaxpower.com

SOUTH AFRICA
service.za@solaxpower.com

Warranty Registration Form

For Customer (Compulsory)

Name _____ Country _____

Phone Number _____ Email _____

Address _____

State _____ Zip Code _____

Product Serial Number _____

Date of Commissioning _____

Installation Company Name _____

Installer Name _____ Electrician License No. _____

For Installer

Module (If Any)

Module Brand _____

Module Size(W) _____

Number of String _____ Number of Panel Per String _____

Battery (If Any)

Battery Type _____

Brand _____

Number of Battery Attached _____

Date of Delivery _____ Signature_____

Please visit our warranty website: https://www.solaxcloud.com/#/warranty or use your mobile phone to scan the QR code to complete the online warranty registration.

For more detailed warranty terms, please visit SolaX official website: www.solaxpower.com to check it.

SolaX Power Network Technology (Zhejiang) Co., Ltd.

Add.: No. 278, Shizhu Road, Chengnan Sub-district, Tonglu County,
Hangzhou, Zhejiang, China
E-mail: info@solaxpower.com

Copyright © SolaX Power Network Technology (Zhejiang) Co., Ltd. All rights reserved.

320102132904